7 ft Flag Pole with "Short Parapet" Roof Bracket
P&B-2
Replacement Parts Guide

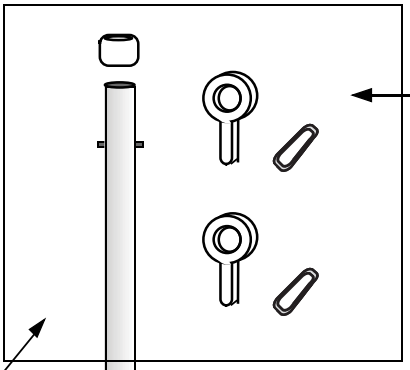

Flag Pole Accessories Bag
(BAG-A)

Includes:
(2) De furling Rings - PL-09
(2) Caribeaneer Clips - HW-003-1/4
(1) Pole Cap - PL-08

Flag Pole and Accessories Bag
(POL-2)

Includes:
7 ft Pole (FAS-04)
Accessories Bag (Bag-A)

7 ft Flag Pole
(FAS-04)

Includes pin & stop

Individual Components :

Cap for Pole (PL-08`)
(1) Defurl Ring w/Hdwre (FAS-A2)
Short Parapet Bracket (FAS-01))
Bracket Screw Bag w/Pin (Bag-C)

Roof Flag System

VOX POP
MARKETING SYSTEMS

To Order call Toll-Free 1-800-386-9767

Copyright 2008 Voxpop, Inc.
Patents Pending
EXP-P&B - 2

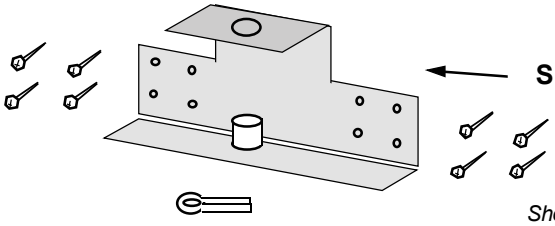

Short Parapet Bracket & Screws
(BKT-2)

Includes:
Short Parapet Bracket (FAS-01)
(6) Attachment screws & Cotter Pin (Bag-C)